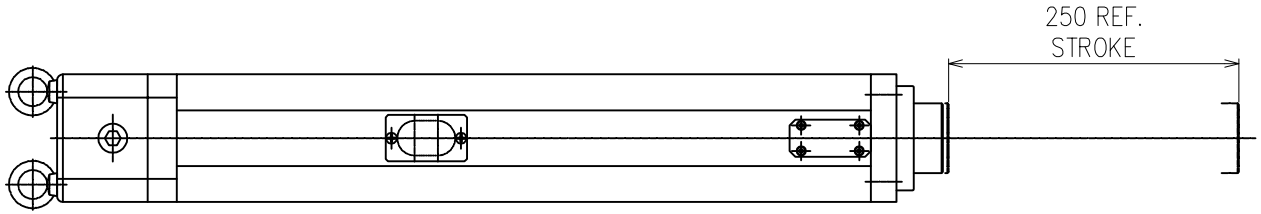

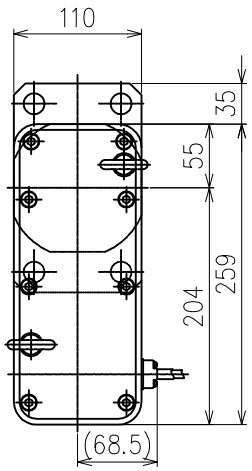

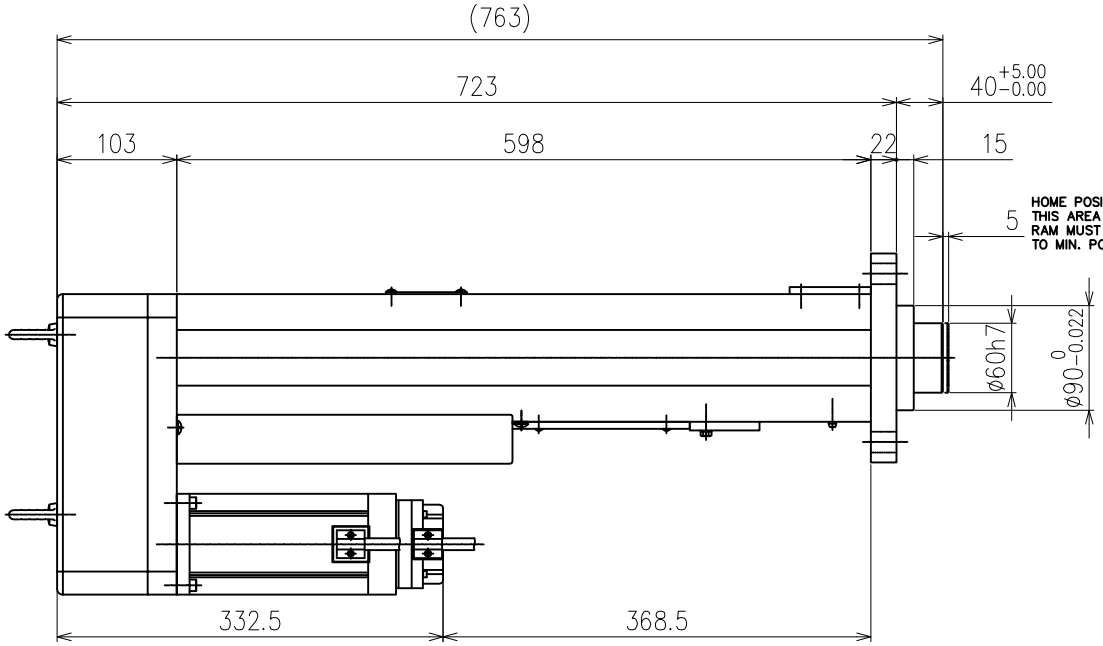

HOME POSITION WILL BE SET WITHIN THIS AREA AT MFG.
RAM MUST BE ALLOWED TO RETURN TO MIN. POSITION IN STATION.

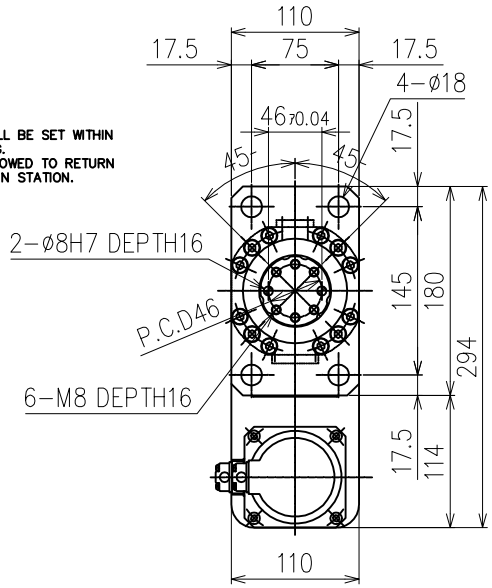

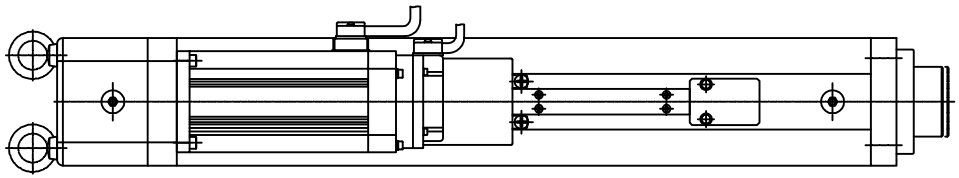

MAX LOAD 19.6kN
MAX SPEED 80mm/sec
APPROX.WEIGHT 57kg

TOLERANCE UNLESS OTHERWISE SPECIFIED

INCH	METRIC
.XX=±.01	.X=±.25
.XXX=±.005	.XX=±.127
.XXXX=±.0005	.XXX=±.0127
ANGLE=±.5°	ANGLE=±.5°

1. DO NOT SCALE DRAWING.
2. BREAK ALL SHARP CORNERS & EDGES EXCEPT AS NOTED.
3. USE HI-COLLAR LOCKWASHERS UNDER ALL SOC. HD. SCREWS.
4. APPLY LOC-TITE TO ALL SCREWS.

NOTICE OF PROPRIETARY RIGHTS
The design concepts and engineering detail embodied in this drawing are the property of FEC INC. and are to be maintained in strict confidence; no element or detail of this drawing is to be disclosed nor used without the express written permission of FEC INC.

AMT	SYM	SHT	NAME	PART #	MFG.

FEC INC
FASTENING AUTOMATION
51327 QUADRATE DRIVE
MACOMB TWP, MI 48042
OFFICE: (586) 781-2100

DES.BY	DET.BY	TITLE
FEC	FEC	EXTERNAL PRESS DRAWING
CHK.BY	SAFETY OK	
FEC		
DATE	SCALE	
00/00/00	1/4	DPT-201R4H-25PSB-00A
SHEET	SHEETS	DRAWING NO.
1	1	DPT-201R4H-25PSB