CHANGES			
SYM.	BY	REVISION	DATE
.	.	.	—

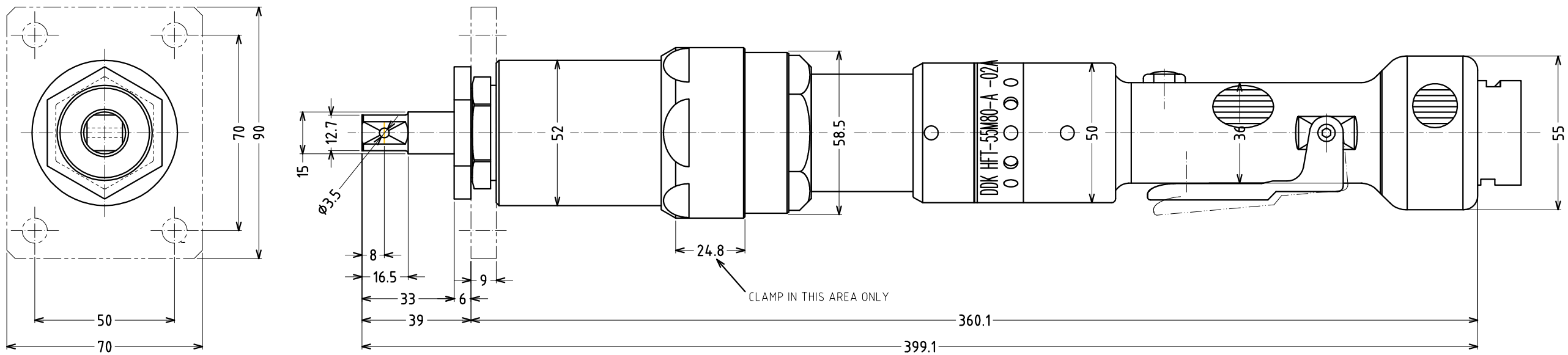

FULL SCALE TORQUE: 55Nm

MAX FREE SPEED: 508 R.P.M.

WEIGHT:

AMT	SYM	SHT	NAME	PART #	MFG.

FEC INC
FASTENING AUTOMATION
51327 QUADRATE DRIVE
MACOMB TWP, MI 48042
OFFICE: (586) 781-2100

DES.BY	DET.BY	TITLE
FEC	FEC	OUTLINE DRAWING FOR HFT-055M80-S-02A
CHK.BY	SAFETY OK	
FEC		
DATE	SCALE	
2/24/10	METRIC FULL	DDK DRAWING #DU-H047 1/1
SHEET	SHEETS	DRAWING NO.
1	1	HFT-055M80-S-02A

NOTICE OF PROPRIETARY RIGHTS

The design concepts and engineering detail embodied in this drawing are the property of FEC INC. and are to be maintained in strict confidence; no element or detail of this drawing is to be disclosed nor used without the express written permission of FEC INC.