CHANGES			
SYM.	BY	REVISION	DATE
–	PAG	CHANGED TO ENGLISH	3/19/08

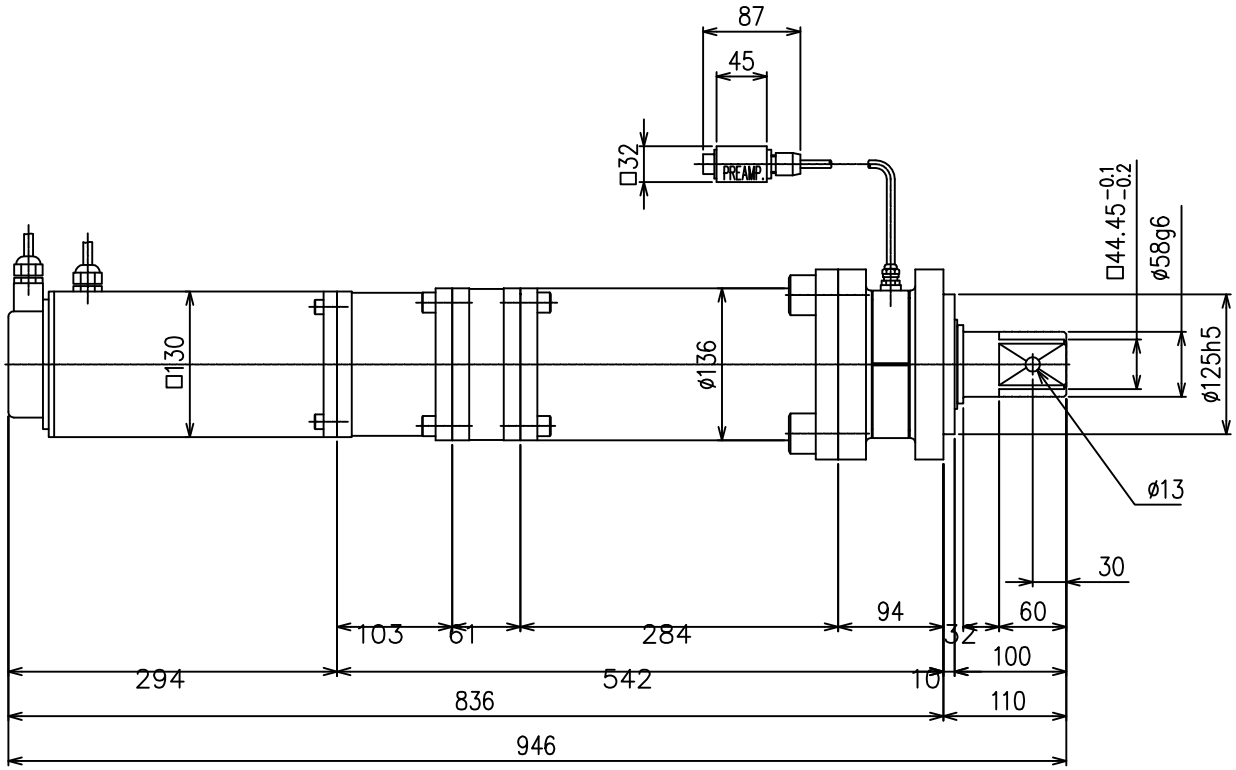

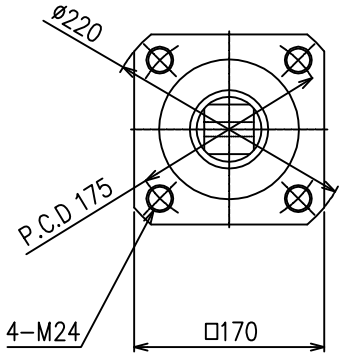

1. FULL SCALE TORQUE 2490Nm
2. MAX FREE SPEED 39 RPM
3. WEIGHT 70 Kg

TOLERANCE UNLESS OTHERWISE SPECIFIED

INCH	METRIC
.XX=±.01	.X=±.25
.XXX=±.005	.XX=±.127
.XXXX=±.0005	.XXX=±.0127
ANGLE=±.5°	ANGLE=±.5°

1. DO NOT SCALE DRAWING.
2. BREAK ALL SHARP CORNERS & EDGES EXCEPT AS NOTED.
3. USE HI-COLLAR LOCKWASHERS UNDER ALL SOC. HD. SCREWS.
4. APPLY LOC-TITE TO ALL SCREWS.

NOTICE OF PROPRIETARY RIGHTS
The design concepts and engineering detail embodied in this drawing are the property of FEC INC. and are to be maintained in strict confidence; no element or detail of this drawing is to be disclosed nor used without the express written permission of FEC INC.

AMT	SYM	SHT	NAME	PART #	MFG.

FEC INC FASTENING AUTOMATION
51327 QUADRATE DRIVE
MACOMB TWP., MI 48042
OFFICE: (586) 781-2100

DES.BY	DET.BY	TITLE
DDK	DDK	TOOL OUTLINE
CHK.BY	SAFETY OK	
DATE 03/19/08	SCALE FULL	METRIC REF. DDK DWG.# DU-D253 2/2
SHEET –	SHEETS –	DRAWING NO. NFT-303RM5-S