CHANGES			
SYM.	BY	REVISION	DATE
-	PAG	CHANGED TO ENGLISH	03/10/08

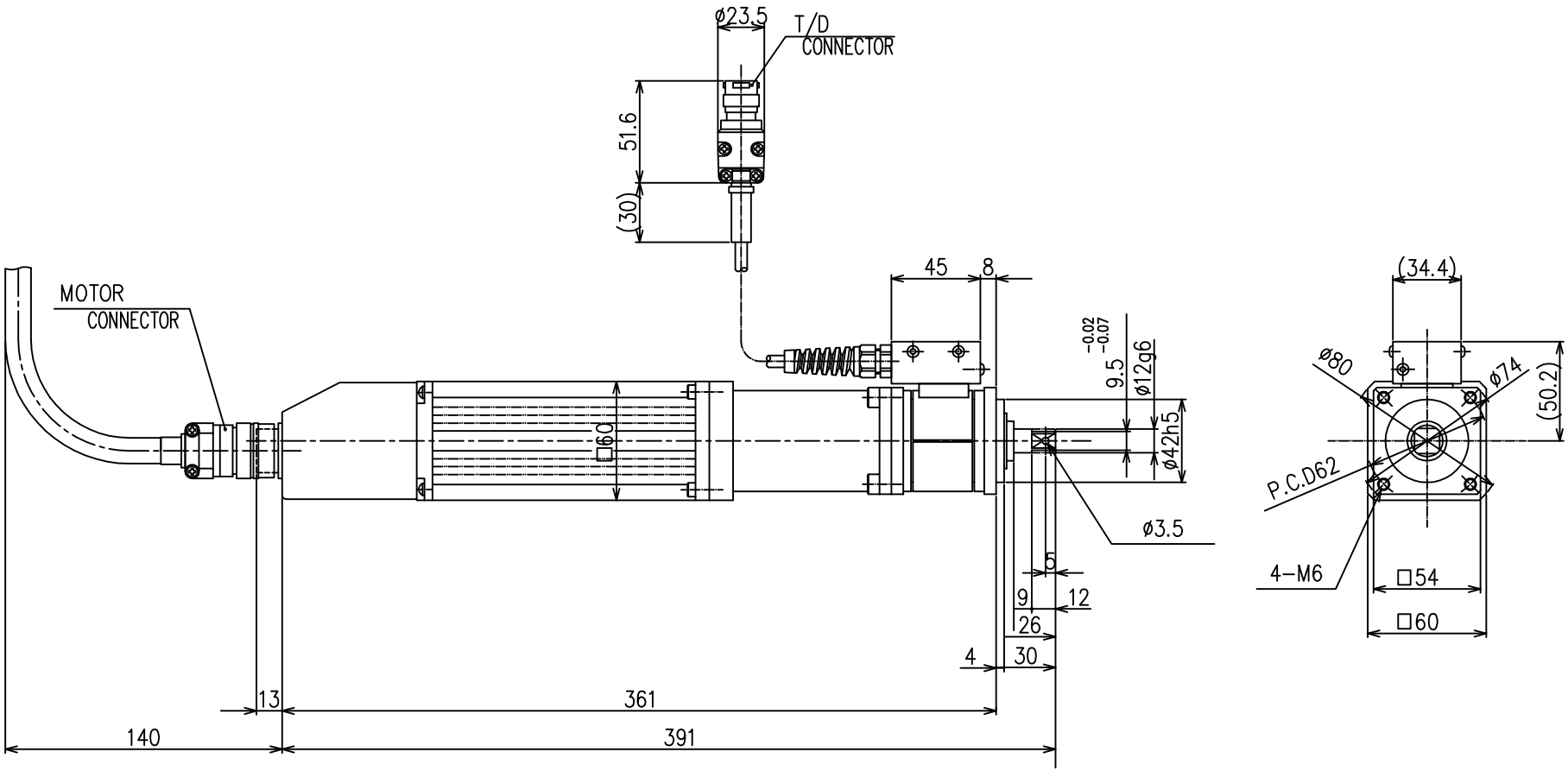

1. FULL SCALE TORQUE 2 kgf-m (19.6N-m)
2. MAX FREE SPEED 790R.P.M
3. WEIGHT kgf

TOLERANCE UNLESS OTHERWISE SPECIFIED

INCH	METRIC
.XX=±.01	.X=±.25
.XXX=±.005	.XX=±.127
.XXXX=±.0005	.XXX=±.0127
ANGLE=±.5°	ANGLE=±.5°

1. DO NOT SCALE DRAWING.
2. BREAK ALL SHARP CORNERS & EDGES EXCEPT AS NOTED.
3. USE HI-COLLAR LOCKWASHERS UNDER ALL SOC. HD. SCREWS.
4. APPLY LOC-TITE TO ALL SCREWS.

NOTICE OF PROPRIETARY RIGHTS
The design concepts and engineering detail embodied in this drawing are the property of FEC INC. and are to be maintained in strict confidence; no element or detail of this drawing is to be disclosed nor used without the express written permission of FEC INC.

AMT	SYM	SHT	NAME	PART #	MFG.

FEC INC FASTENING AUTOMATION
51327 QUADRATE DRIVE
MACOMB TWP, MI 48042
OFFICE: (586) 781-2100

DES.BY	DET.BY	TITLE
DDK	DDK	TOOL OUTLINE
CHK.BY	SAFETY BY	
DATE	SCALE	
03/19/08	FULL	METRIC
SHEET	SHEETS	DRAWING NO.
-	-	NFT-201RM3A-S