TOOL & SPINDLE ASSEMBLY TOGETHER

NFT–802RM4A–S

FULL SCALE TORQUE = 80 kgfm (784 Nm)
MAX. FREE SPEED = 100 RPM
WEIGHT = 15 kg (33.1 LBS)

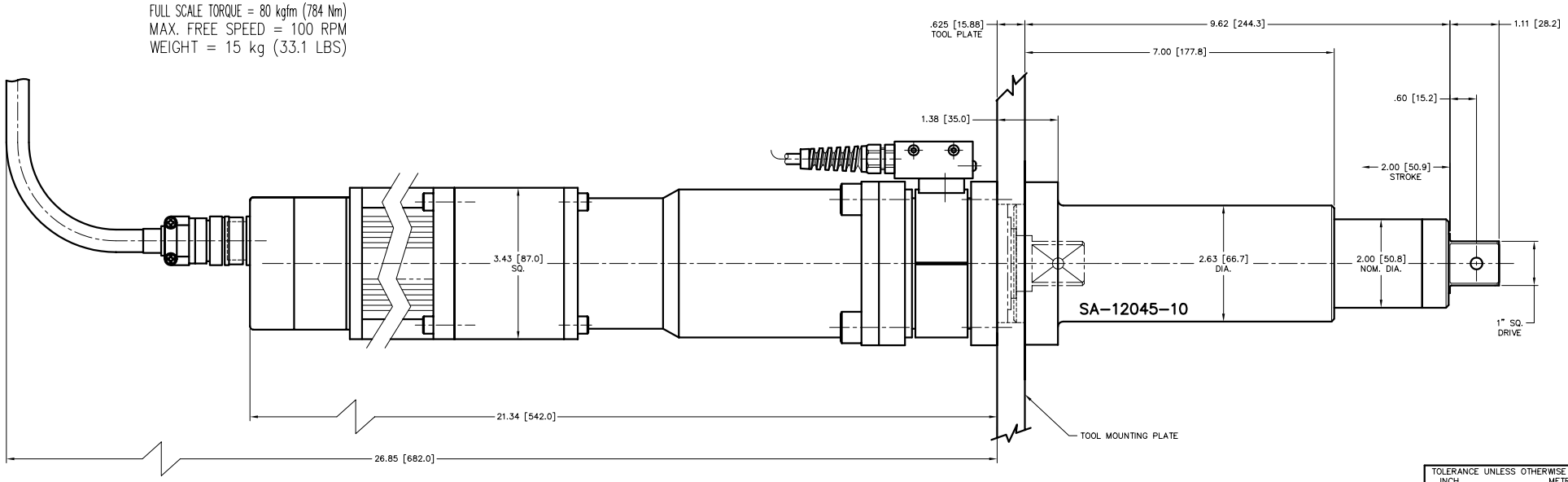

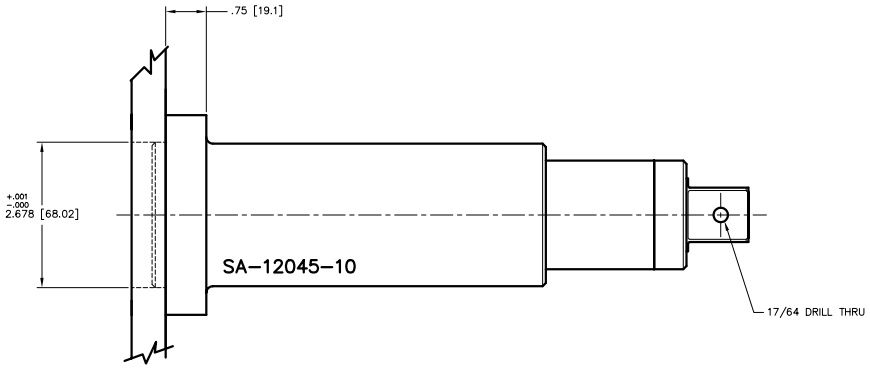

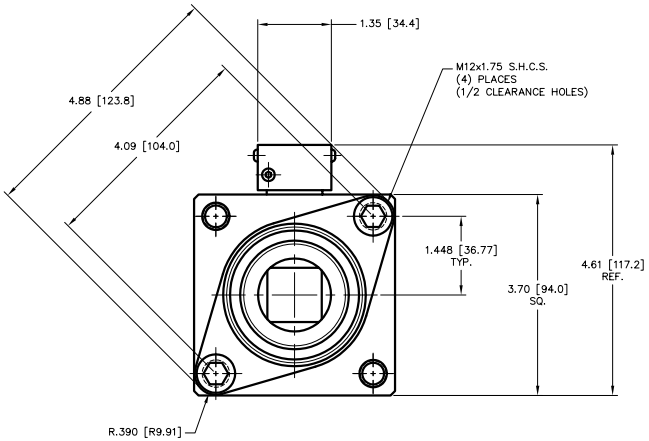

CHANGES			
SYM.	BY	REVISION	DATE

TOLERANCE UNLESS OTHERWISE SPECIFIED

INCH	METRIC
.XX=±.01	.X=±.25
.XXX=±.005	.XX=±.127
.XXXX=±.0005	.XXX=±.0127
ANGLE=±.5°	ANGLE=±.5°

1. DO NOT SCALE DRAWING.
2. BREAK ALL SHARP CORNERS & EDGES EXCEPT AS NOTED.
3. USE HI–COLLAR LOCKWASHERS UNDER ALL SOC. HD. SCREWS.
4. APPLY LOC–TITE TO ALL SCREWS.

NOTICE OF PROPRIETARY RIGHTS

The design concepts and engineering detail embodied in this drawing are the property of FEC INC. and are to be maintained in strict confidence; no element or detail of this drawing is to be disclosed nor used without the express written permission of FEC INC.

AMT	SYM	SHT	NAME	PART #

FEC INC — FASTENING AUTOMATION
32655 INDUSTRIAL DR.
MADISON HEIGHTS, MI. 48071
(248) 589–1444

DES.BY	DET.BY	TITLE
FEC	BMB	SPINDLE ADAPTOR FOR NFT–802RM4A–S
CHK.BY	SAFETY OK	
FEC		
DATE	SCALE	1" DIA. 2" STROKE
10/12/06	FULL	
SHEET	SHEETS	DRAWING NO.
1	1	NFT–802RM4A–S W/SA–12045–10