TOOL & SPINDLE ASSEMBLY TOGETHER

CHANGES			
SYM.	BY	REVISION	DATE

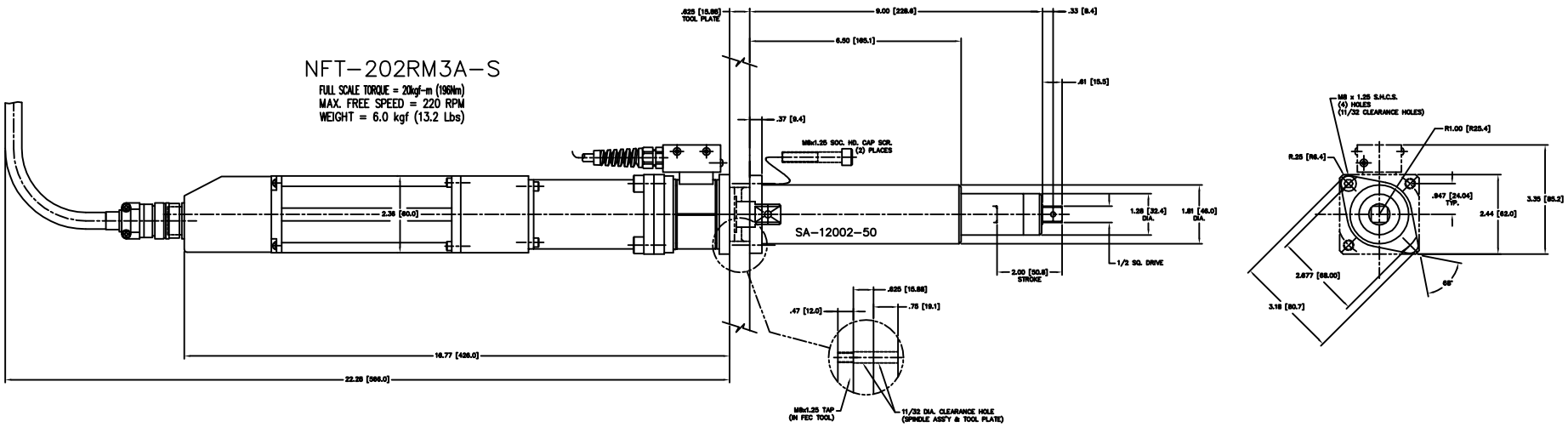

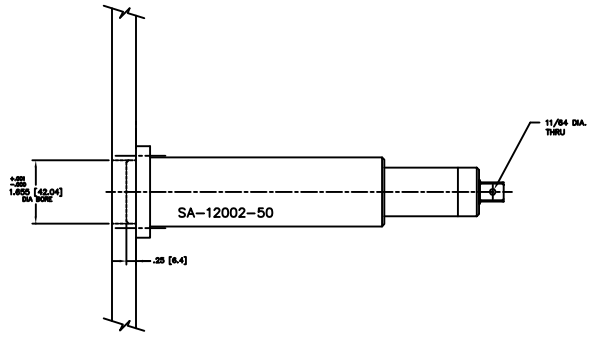

TOLERANCE UNLESS OTHERWISE SPECIFIED	
INCH	METRIC
.XX=±.01	.X=±.25
.XXX=±.005	.XX=±.127
.XXXX=±.0005	.XXX=±.0127
ANGLE=±.5°	ANGLE=±.5°

1. DO NOT SCALE DRAWING.
2. BREAK ALL SHARP CORNERS & EDGES EXCEPT AS NOTED.
3. USE HI-COLLAR LOCKWASHERS UNDER ALL SOC. HD. SCREWS.
4. APPLY LOC-TITE TO ALL SCREWS.

NOTICE OF PROPRIETARY RIGHTS
This design, concepts and engineering detail contained in this drawing are the property of FEC Inc. and are to be used only for the purpose for which they are issued or stated on this drawing. It is to be returned on demand and without the express written permission of FEC Inc.

PART #	SYM	SHT	NAME	PART #

FEC INC
FLEXIBLE ENGINEERING CORPORATION
10357 SANDMAN DRIVE
ENDEN TEX. 78 4004
OFFICE: (830) 765-8100

DRAWN BY	DATE
CHECKED BY	SHEET SIZE
APP BY	
DATE 05/13/04	SCALE FULL
SHEET 1	SHEETS 1

TITLE
SPINDLE ADAPTOR FOR NFT-202RM3A-S

1-1/4" DIA. 2" STROKE

DRAWING NO.
NFT-202RM3A-S W/SA-12002-50