CHANGES			
SYM.	BY	REVISION	DATE

TOOL & SPINDLE ASSEMBLY TOGETHER

NFT–101RM1A–S1

FULL SCALE TORQUE = 1 kgfm (9.8 Nm)
MAX. FREE SPEED = 500 RPM
WEIGHT = 1.9 kgf (4.2 Lbs)

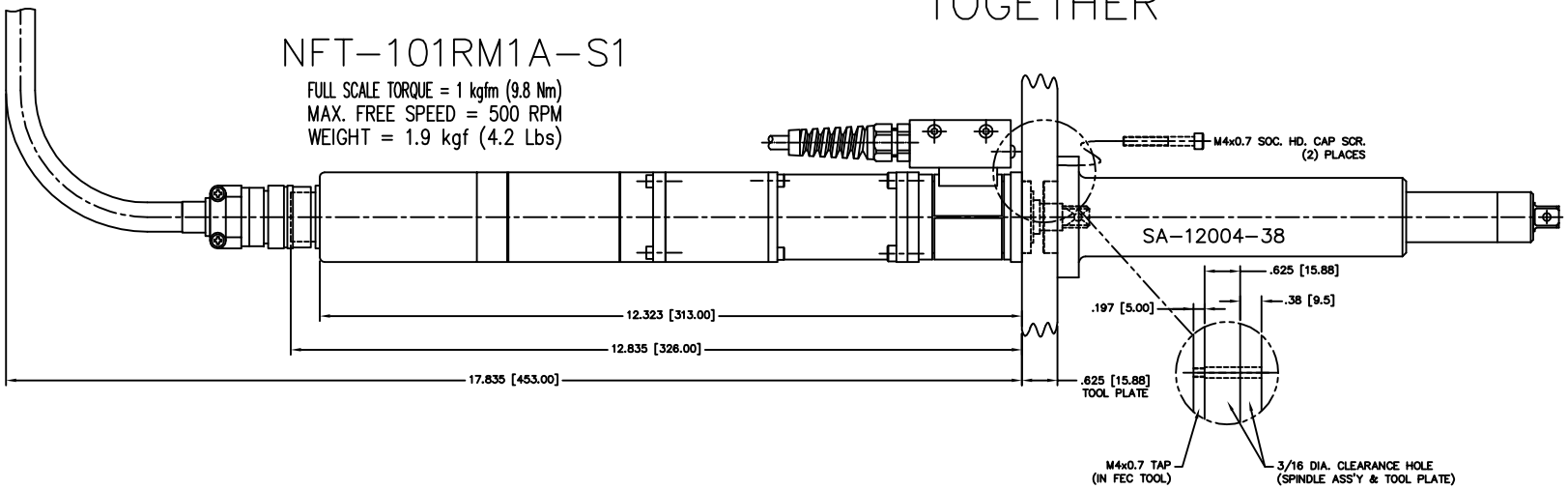

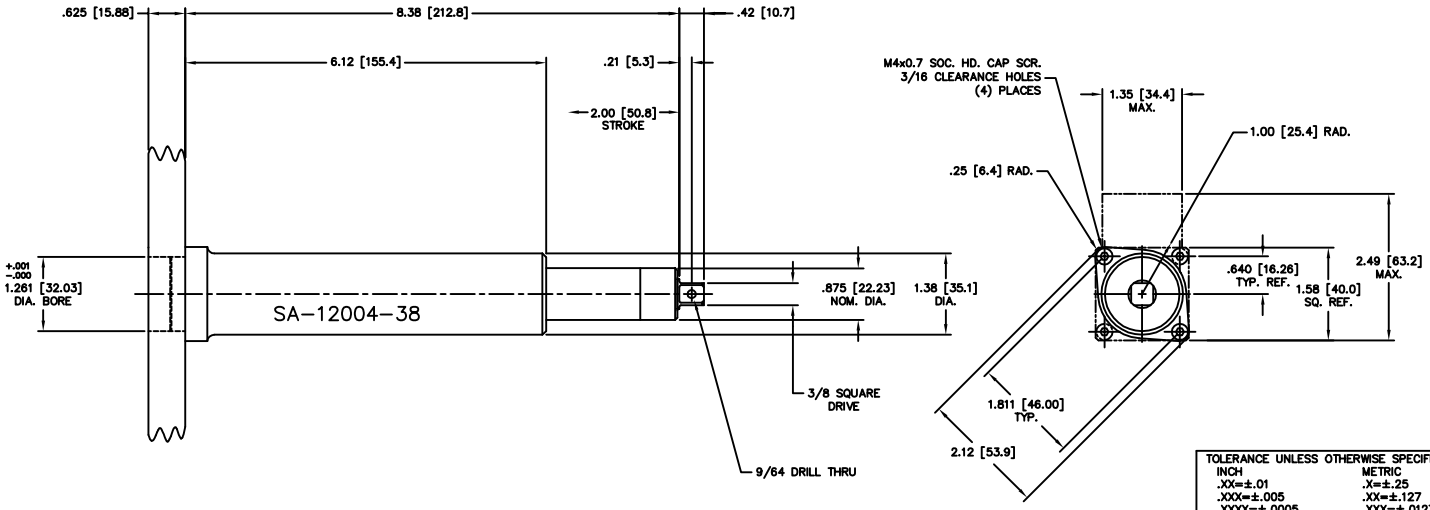

TOLERANCE UNLESS OTHERWISE SPECIFIED

INCH	METRIC
.XX=±.01	.X=±.25
.XXX=±.005	.XX=±.127
.XXXX=±.0005	.XXX=±.0127
ANGLE=±.5°	ANGLE=±.5°

1. DO NOT SCALE DRAWING.
2. BREAK ALL SHARP CORNERS & EDGES EXCEPT AS NOTED.
3. USE HI–COLLAR LOCKWASHERS UNDER ALL SOC. HD. SCREWS.
4. APPLY LOC–TITE TO ALL SCREWS.

NOTICE OF PROPRIETARY RIGHTS
The design concepts and engineering detail embodied in this drawing are the property of FEC INC. and are to be maintained in strict confidence; no element or detail of this drawing is to be disclosed nor used without the express written permission of FEC INC.

AMT	SYM	SHT	NAME	PART #

FEC INC FASTENING AUTOMATION
51327 QUADRATE DR.
MACOMB, MI. 48042
(586) 781–2100

DES.BY	DET.BY	TITLE
dct		SPINDLE ADAPTOR FOR NFT–101RM1A–S1
CHK.BY	SAFETY OK	
DATE 7/25/02	SCALE FULL	7/8" DIA. 2" STROKE
SHEET 1	SHEETS 1	DRAWING NO. NFT–101RM1A–S1 W/SA–12004–38