TOOL & SPINDLE ASSEMBLY TOGETHER

CHANGES			
SYM.	BY	REVISION	DATE

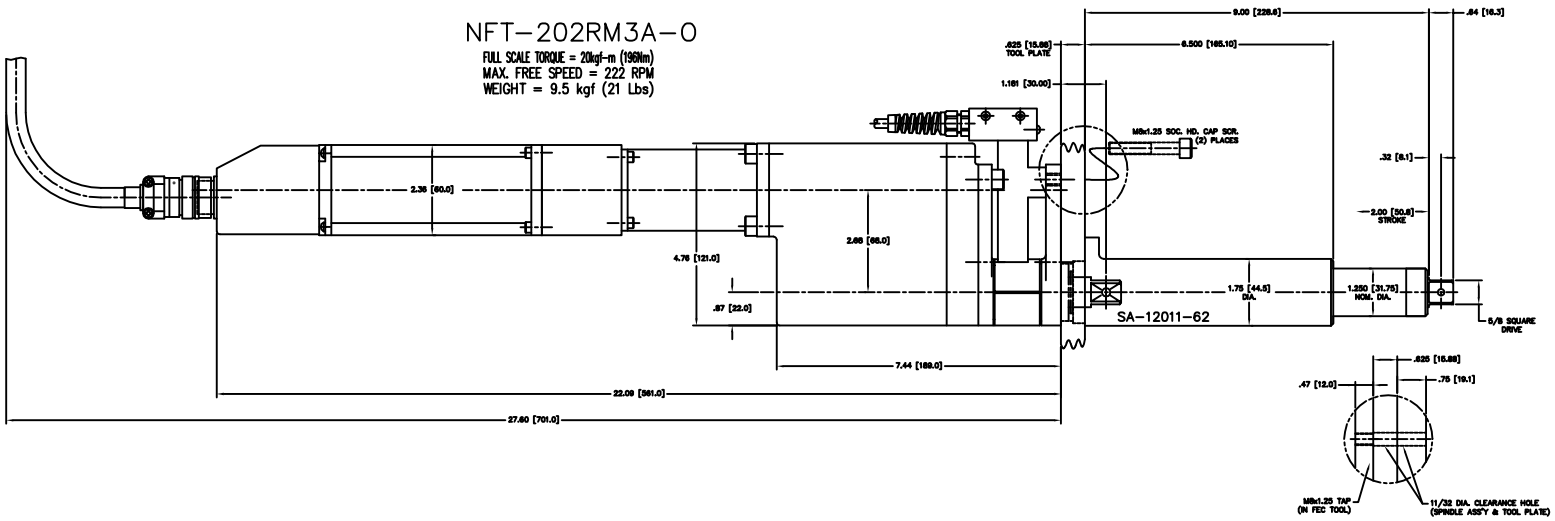

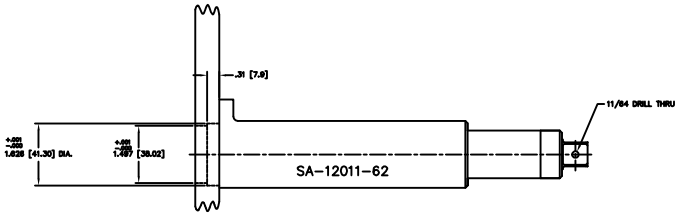

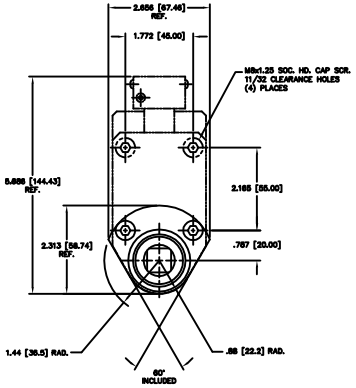

TOLERANCE UNLESS OTHERWISE SPECIFIED

INCH	METRIC
.XX=±.01	.X=±.25
.XXX=±.005	.XX=±.127
.XXXX=±.0005	.XXX=±.0127
ANGLE=±.5°	ANGLE=±.5°

1. DO NOT SCALE DRAWING.
2. BREAK ALL SHARP CORNERS & EDGES EXCEPT AS NOTED.
3. USE #6-COLLAR LOCKWASHERS UNDER ALL SOC. HD. SCREWS.
4. APPLY LOC-TITE TO ALL SCREWS.

NOTICE OF PROPRIETARY RIGHTS
The design concepts and engineering data contained in this drawing are the property of FEC SIS, and are to be maintained in strict confidence, no element or detail of this drawing is to be disclosed nor used without the express written permission of FEC SIS.

QNT	SYM	SHT	NAME	PART #

FEC SIS
FUNCTIONAL ENGINEERING SERVICES
24357 CHAGRINVALLEY DRIVE
MARYSVILLE, WA 98053
OFFICE: (360) 659-3900

DESIGN BY: SMB	DATE: SMB	TITLE: SPINDLE ADAPTOR FOR NFT-202RM3A-0
DRAWN BY: SMB	SHEET BY:	
APP BY:		
DATE: 06/15/06	SCALE: FULL	1-1/4" DIA. 2" STROKE
SHEET: 1	SHEETS: 1	DRAWING NO. NFT-202RM3A-0 W/SA-12011-62