TOOL & SPINDLE ASSEMBLY TOGETHER

CHANGES			
SYM.	BY	REVISION	DATE

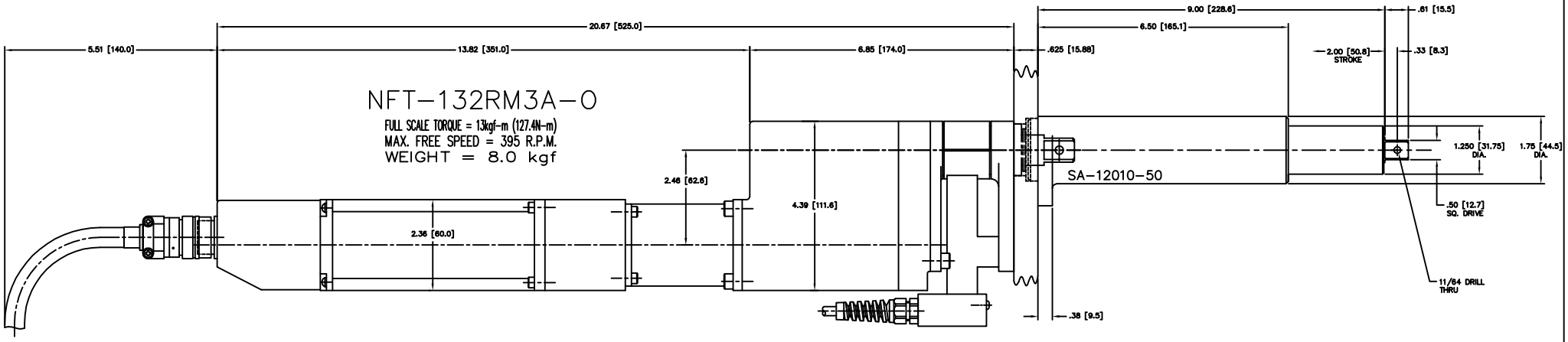

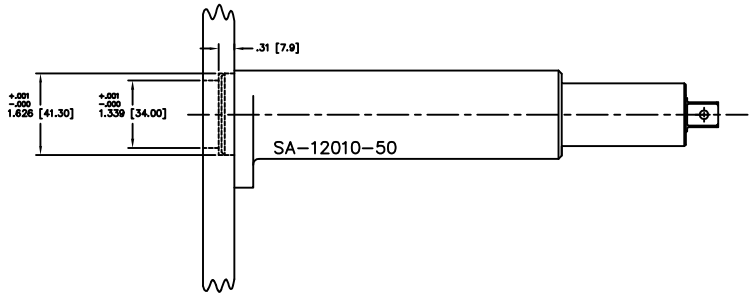

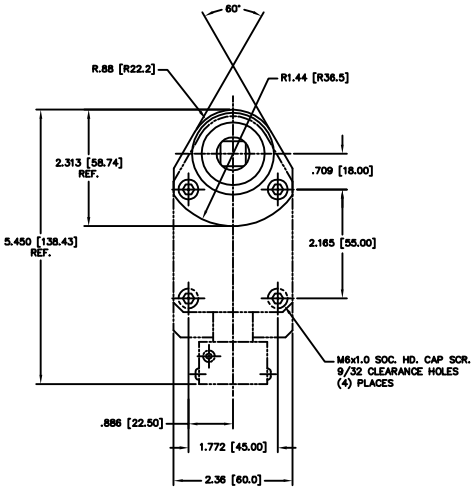

TOLERANCE UNLESS OTHERWISE SPECIFIED

INCH	METRIC
.XX=±.01	.X=±.25
.XXX=±.005	.XX=±.127
.XXXX=±.0005	.XXX=±.0127
ANGLE=±.5°	ANGLE=±.5°

1. DO NOT SCALE DRAWING.
2. BREAK ALL SHARP CORNERS & EDGES EXCEPT AS NOTED.
3. USE HI-COLLAR LOCKWASHERS UNDER ALL SOC. HD. SCREWS.
4. APPLY LOC-TITE TO ALL SCREWS.

NOTICE OF PROPRIETARY RIGHTS

The design concepts and engineering detail embodied in this drawing are the property of FEC INC. and are to be maintained in strict confidence; no element or detail of this drawing is to be disclosed nor used without the express written permission of FEC INC.

AMT	SYM	SHT	NAME	PART #

FEC INC
FASTENING EQUIPMENT AUTOMATION
51337 QUADRATE DR.
MACOMB, MI. 48042
(586) 781-2100

DES.BY BMB	DET.BY FEC	TITLE SPINDLE ADAPTOR WITH NFT-132RM3A-S
CHK.BY FEC	SAFETY OK	
DATE 01/07/05	SCALE N/A	1/2 SQ. DRIVE 2" STROKE
SHEET 1	SHEETS 1	DRAWING NO. NFT-132RM3A-0 W/SA-12010-50