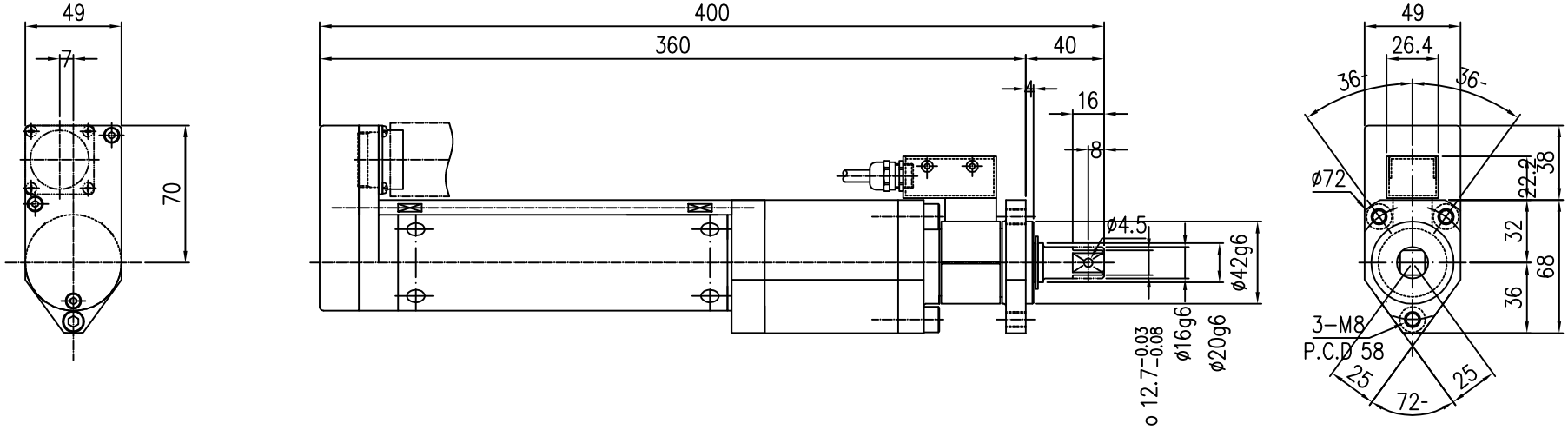

ASS'Y MODEL	NFT-401RH3B-SS
FULL SCALE TORQUE	40NM(4.08Kgm)
MAX SPEED(rpm)	1980rpm
WEIGHT	4.2 Kg

TOLERANCE UNLESS OTHERWISE SPECIFIED

INCH	METRIC
.XX=±.01	.X=±.25
.XXX=±.005	.XX=±.127
.XXXX=±.0005	.XXX=±.0127
ANGLE=±.5°	ANGLE=±.5°

BREAK ALL SHARP CORNERS & EDGES EXCEPT AS NOTED
DO NOTE SCALE DRAWING

NOTICE OF PROPRIETARY RIGHTS

The design concepts and engineering detail embodied in this drawing are the property of FEC INC. and are to be maintained in strict confidence; no element or detail of this drawing is to be disclosed nor used without the express written permission of FEC INC.

ANT	SYM	SHT	NAME	PART #	MFG.

FEC INC FASTENING AUTOMATION
5927 QUADRATE DRIVE
MACOMB TWP, MI 48042
OFFICE: (586) 781-2100

DES.BY	DET.BY	TITLE TOOL ASSEMBLY DRAWING FOR A NFT-401RH3B-SS TOOL
CHK.BY	SAFETY OK	
DATE 10/23/08	SCALE FULL	
SHEET	SHEETS	DRAWING NO. NFT-401RH3B-SS