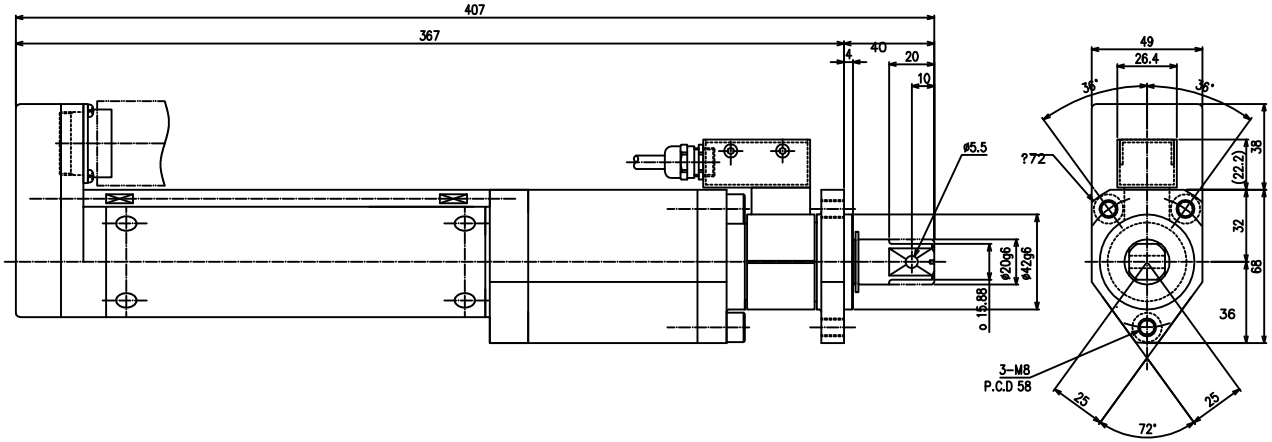

ASS'Y MODEL	NFT-132RH3B-SS
FULL SCALE TORQUE	130NM(13.3Kgm)
MAX SPEED(rpm)	580rpm
WEIGHT	?4.3 Kg

TOLERANCE UNLESS OTHERWISE SPECIFIED

INCH	METRIC
.XX=±.01	.X=±.25
.XXX=±.005	.XX=±.127
.XXXX=±.0005	.XXX=±.0127
ANGLE=±.5°	ANGLE=±.5°

BREAK ALL SHARP CORNERS & EDGES EXCEPT AS NOTED
DO NOTE SCALE DRAWING

NOTICE OF PROPRIETARY RIGHTS

The design concepts and engineering detail embodied in this drawing are the property of FEC INC. and are to be maintained in strict confidence; no element or detail of this drawing is to be disclosed nor used without the express written permission of FEC INC.

AMT	SYM	SHT	NAME	PART #	MFG.

FEC INC
FASTENING AUTOMATION
51027 QUADRATE DRIVE
MACOMB TWP, MI 48042
OFFICE: (586) 781-2100

DES.BY	DET.BY
CHK.BY	SAFETY CK
DATE 3/26/08	SCALE FULL
SHEET	SHEETS

TITLE
TOOL ASSEMBLY DRAWING
FOR A NFT-132RH3B-SS TOOL

DRAWING NO.
NFT-132RH3B-SS